DOSING PUMP

TEKNA 12 VDC Series – Solenoid Dosing Pump

TECHNICAL CHARACTERISTICS

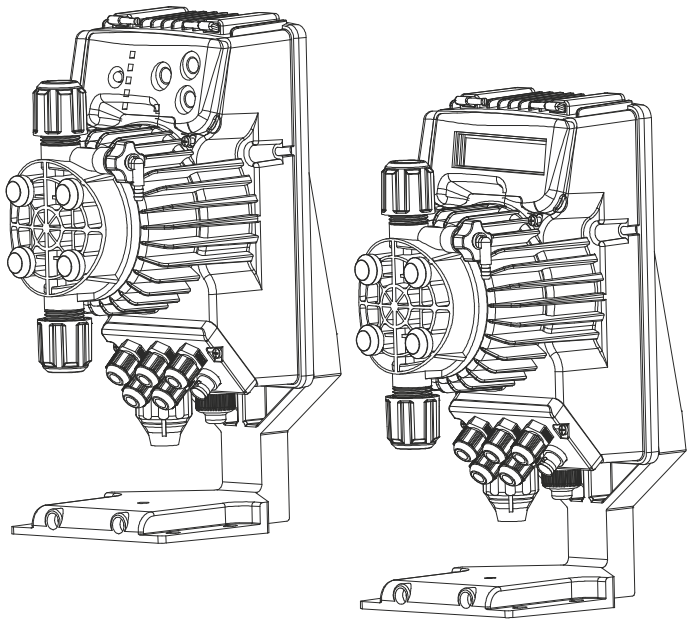

- Flow rates: from 3 to 5 l/h
- Max back pressure: up to 10 bar
- Power supply: 12 Vdc
- Stroke rate: 300 strokes/minute
- Pump head: PVDF
- Diaphragm: PTFE
- External Enclosure: PP reinforced with fiber glass protection degree IP65
- Manually priming valve
- Installation kit: Included

Seko Tekna 12 Vdc Series is composed of two models:

- **AKS** - an analogic dosing pump with constant flow rate, which is manually adjustable by a knob mounted on the front panel. The flow rate has two frequency ranges:
  - 0÷20 % of max flow rate
  - 0÷100% of max flow rate
- **TPT** - digital dosing pump with constant flow rate manually adjustable, with proportional flow rate according to an external analog (4-20 mA) or digital signal (water meter); Batch mode; Timer function; ppm proportional dosing; Statistics; Password; Input ON-OFF (remote control), pH/Redox control meter on board, PT100 or PT1000 (selectable) probe input (thermal compensation).

This series has been designed for use in conjunction with solar panels, batteries for cars, and all those situations where you can't use a power supply network. One size that pump can cover a range of performances, having a flow rate range from 3 to 5 l/h and a back pressure from 5 to 10 bar. The standard pump head is in PVDF, therefore high chemical compatibility with several liquids end but is available in PVC as well, on request.

All Tekna series are equipped with a manually priming pump for the start up.

The pump is furnished with a complete standard installation kit, which includes: PVDF foot filter and injection valve, PVC suction tube, PE delivery tube. Moreover is available an installation kit in PVDF-T, on request.

The ambient temperature at the site of pump installation cannot exceed 40°C, and the relative humidity cannot be above 90%; the pump cannot be installed in a place exposed to sun or bad weather.

DOSING PUMP

TEKNA 12 VDC Series – Solenoid Dosing Pump

KEY CODE

model	
AKS	Analog interface. Constant flow rate manually adjustable.
TPT	Digital interface. Constant flow rate manually adjustable, with proportional flow rate according to an external analog (4-20 mA) or digital signal (water meter); Batch mode; Timer function; ppm proportional dosing; Statistics; Password; Input ON-OFF (remote control), pH/Redox, control meter on board, PT100 or PT1000 (selectable) probe input (thermal compensation).

hydraulics	*Pressure* [bar]	*Flow rate* [l/h]	*Capacity* [cc/stroke]	*Frequency* [stroke/1']	*Ø Connections* IN / EXT [mm]
812	10	3	0,2	300	4 / 6
	8	4	0,2		
	5	5	0,3		

power supply	
L	12 Vdc

liquid end	
H	PVDF
A	PVDF - automatic degassing
I	SS316L

installation kit		
H	PVDF	
P	PVDF-T	
X	with 1,5 bar injection valve	
0	WITHOUT kit	*only for SS316L liquid end*

seals		
0	FKM-B	
1	EPDM	
2	PTFE	
3	FFKM	*NOT for 803 hydraulic - kit with PTFE seals*

optional	
0	standard

optional / customization	
00	standard

TPT	812	L	H	H	1	0	00

DOSING PUMP

TEKNA 12 VDC Series – Solenoid Dosing Pump

HYDRAULIC CHARACTERISTICS

Pump model	Pressure [bar]	Flow Rate [l/h]	Frequency max [stroke/min]	*Stroke capacity [cc/stroke]*	*Connection [mm]*		Power supply	Consumption [W]	
					Suction	Discharge		Min	Max
AKS / TPT 812L	10 8 5	3,0 4,0 5,0	300	0,17 0,22 0,28	4/6	4/6	12 Vdc	6,5 rms	66

**** Pressure Data in the table refer to the measured parameters on the plant, including the use of SEKO STANDARD injection fitting.***

DIMENSIONS

AKS

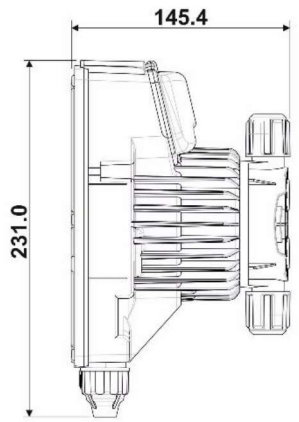

TPT

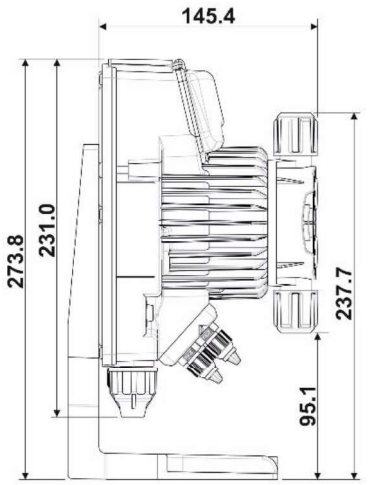

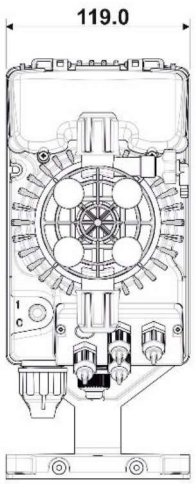

INSTALLATION KIT	PVDF	PVDF-T
foot filter	●	●
injection valve	●	●
PVC suction tube (4 m)	●	
PE delivery tube (2 m)	●	
Wall and base fixing bracket	●	
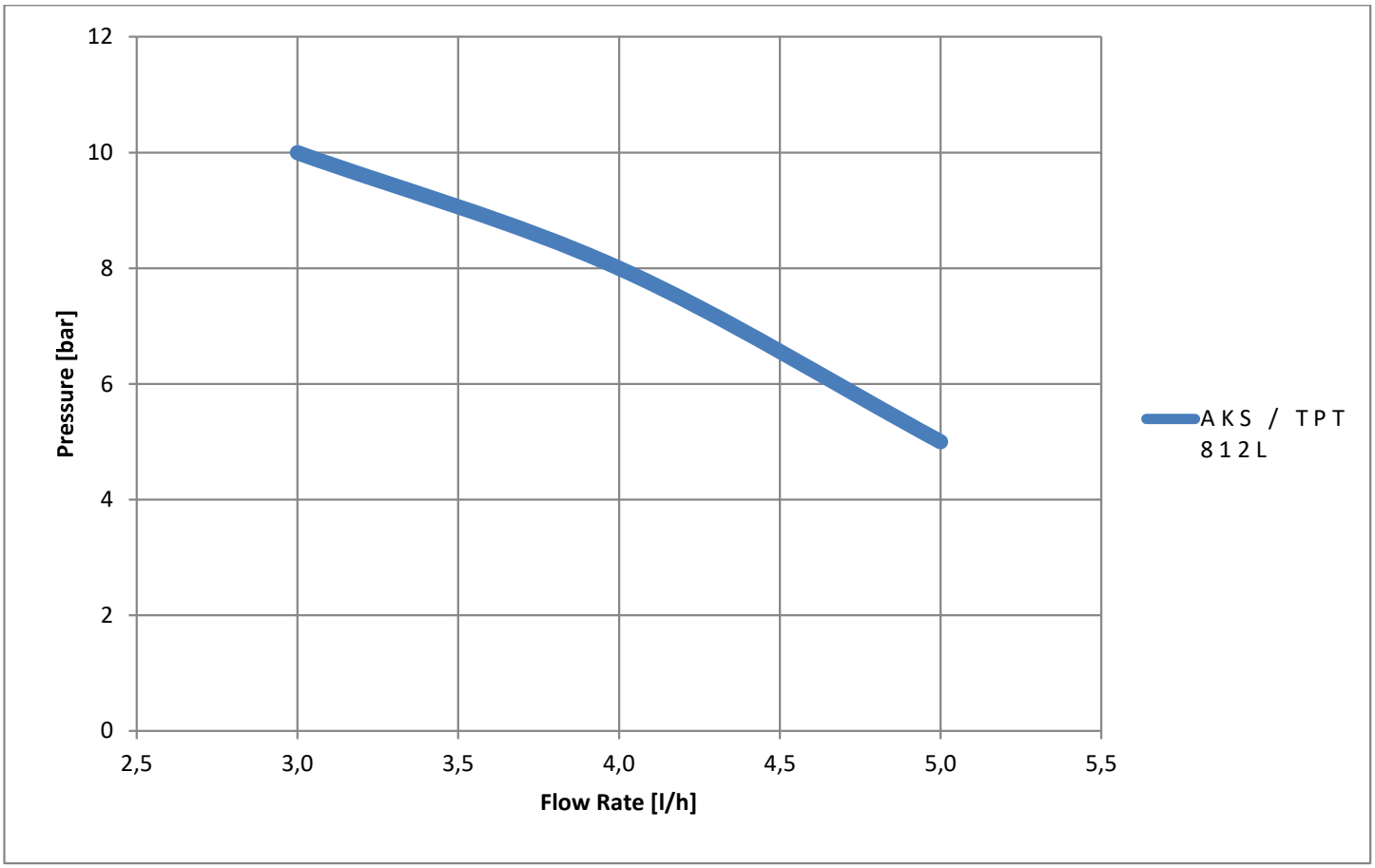
PERFORMANCE